TR10

english US

TECHNOALPIN®


TR10

TECHNOALPIN®

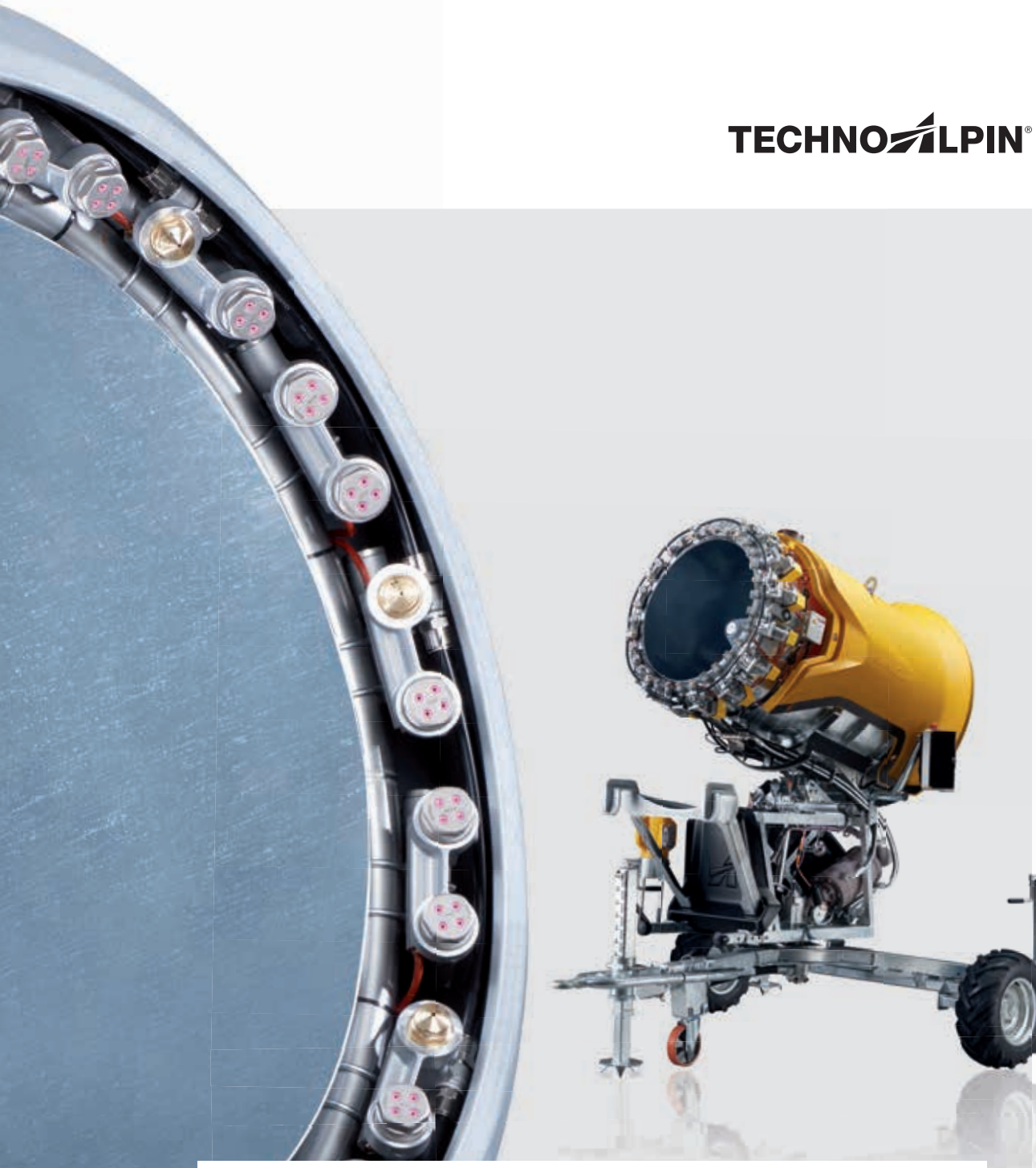

INNOVATION MAKES THE DIFFERENCE

The focus of the development work at TechnoAlpin is on guaranteeing top snow quality while at the same time optimizing the use of resources and maximizing the usability of the snow producers. The TR10 fan gun combines all of these criteria which is the peak of achievement and innovation excellence.

www.technoalpin.com

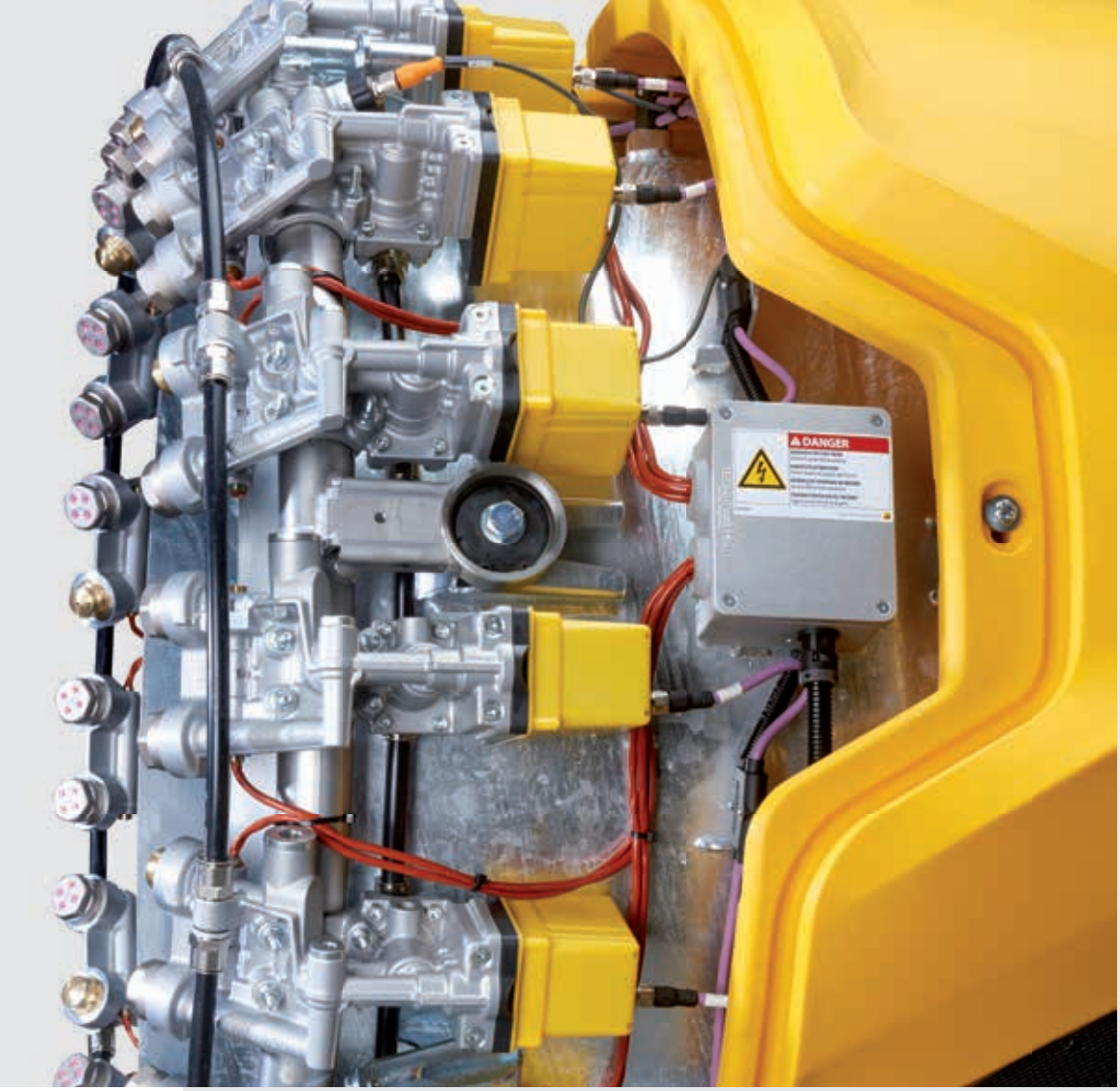

TR10

MORE IS MORE

A completely new nozzle valve system has been designed for the TR10. The central valve block is replaced by single valves which are individually controlled. Highly innovative and perfectly coordinated, each nozzle block on the nozzle ring is controlled by its own valve. More valves bring more advantages.

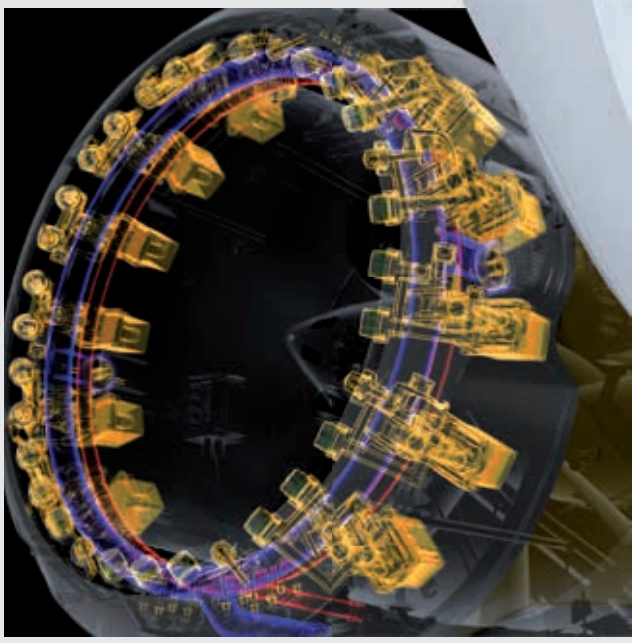

TECHNOALPIN®

RESOURCE EFFICIENCY The new nozzle valve block on the TR10 prevents water loss when operating the various valves as the nozzles are now emptied using compressed air. The excess water is integrated directly into the air stream and then converted into snow.

OPERATIONAL SAFETY The innovative nozzle valve design completely eliminates the need for the central valve block and front discharge. This prevents the formation of ice in front of the machine and greatly increases operational safety.

TECHNICAL RELIABILITY Thanks to the intelligent valve circuit, the valves can replace each other in the event of a failure, ensuring that the required number of nozzles is always open.

TR10

BEST SNOW OUTPUT IN MARGINAL CONDITIONS

Air cooling on the machine is key to improving snowmaking performance in marginal conditions. The air cooler on the TR10 has been redesigned and improved. It has an unprecedented cooling capacity due to the significant increase in the amount of cooling surface, thereby enabling the production of perfect quality snow even in difficult temperature conditions. The TR10 is particularly impressive at borderline temperatures, achieving unsurpassed levels of snow output.

TECHNOALPIN®

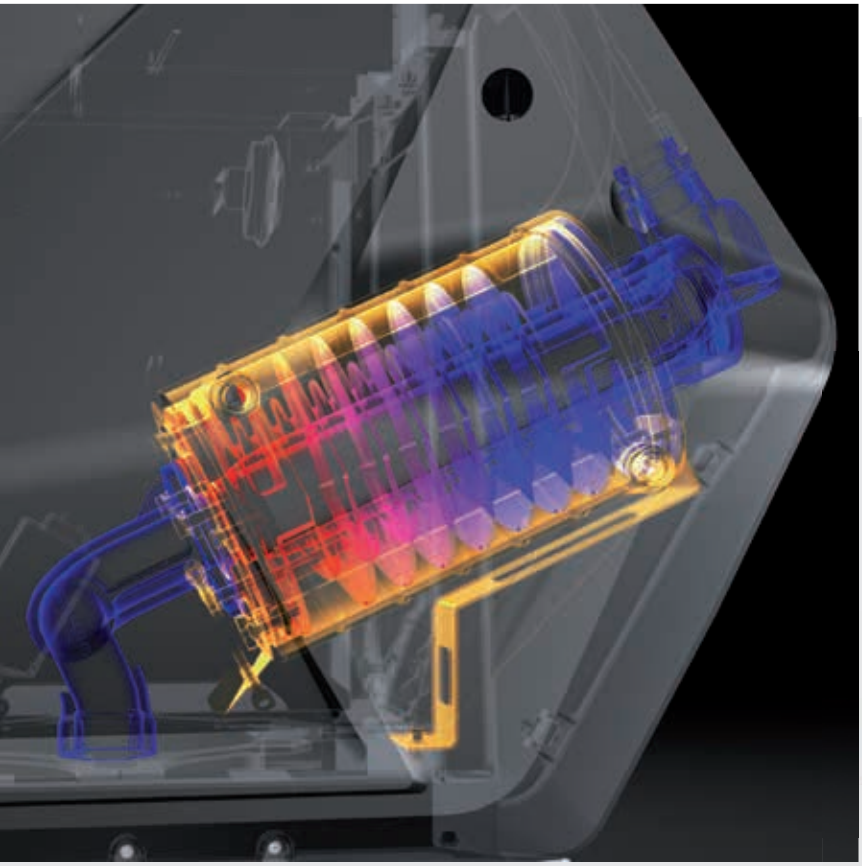

www.technoalpin.com

TR10

TECHNOALPIN®

GEMSTONE-QUALITY SNOW

Perfect snow quality starts with the smallest parts of a snow producer. The optimum air and water mixture is the decisive factor. All the nucleators on the TR10 are fitted with two ruby inserts as standard, seated in the hole through which the correct amount of water is allowed into the compressed air. These ruby inserts boast maximum wear resistance, even in the presence of abrasive water and high operating pressures. They enable the constant production of high-quality snow over many years and significantly reduce the need to replace nucleators.

TECHNOALPIN®

ALWAYS IN THE LEAD

The correct snowmaking position is vital in order to produce snow efficiently. The TR10 has a completely new mechanism which automatically takes the snow producer – even the mobile model – to the correct vertical snowmaking position when it is put into operation. The TR10 will automatically move to the correct working position and return to the starting position after the end of snowmaking operations, making it less susceptible to damage when not in use.

SIMPLE AND AUTOMATIC

The aim of this change was not only to improve the snow output but also to simplify the work of the snowmaking crew. Both the starting and the working position of the TR10 can be preset individually. The swivel settings of the fan gun have also been improved in order to optimize the placement of the snow on the slope.

www.technoalpin.com


TR10

TECHNOALPIN®

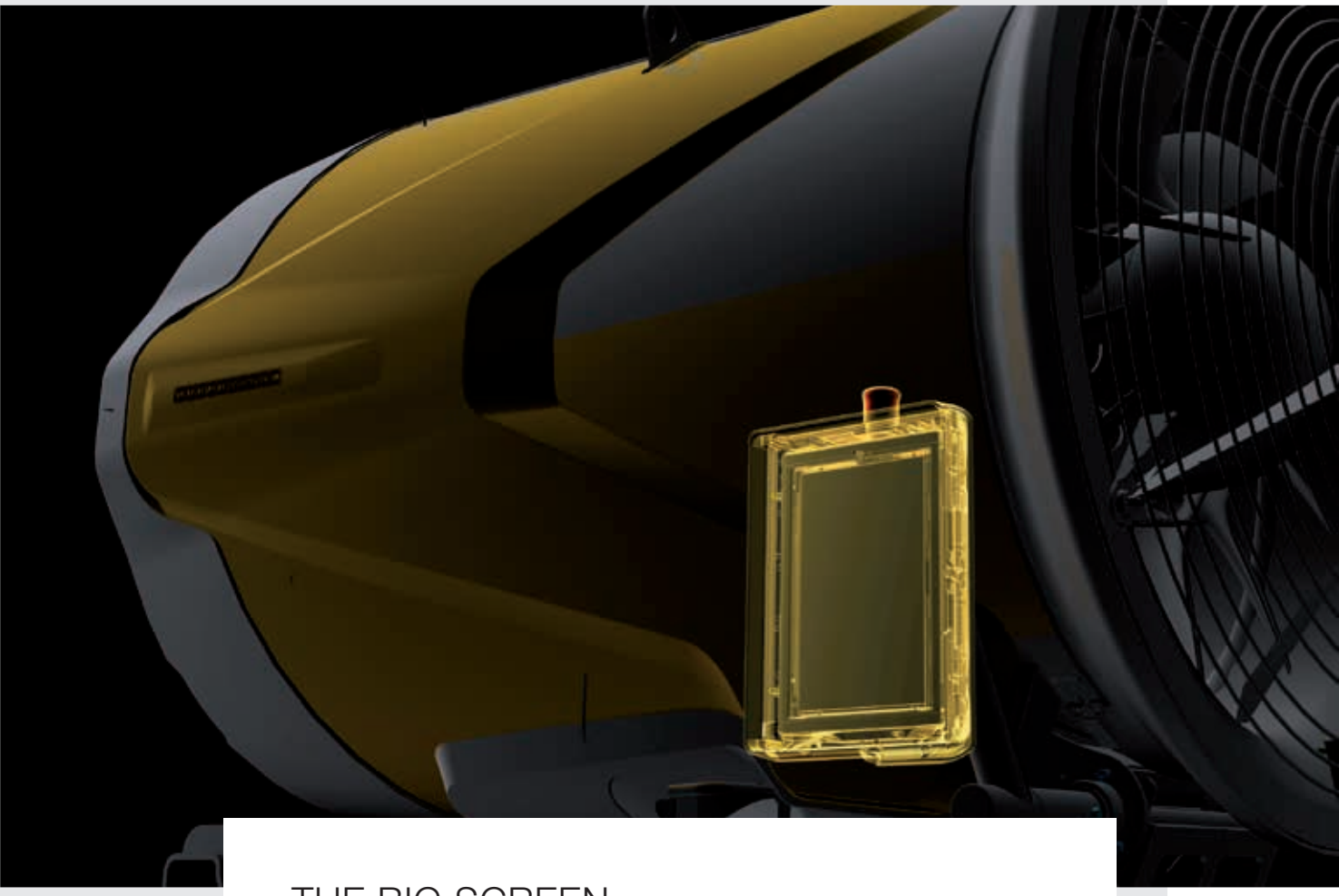

THE BIG SCREEN

The TR10 comes with the largest touchscreen on the market. The touch functions have been specifically integrated into the machine control system and are therefore particularly user-friendly. The touch display has been carefully adapted to the requirements of the snowmaking crews and boasts impressive and unique features.

OPTIMUM READABILITY The incredible brightness level and automatic dimmer function allow perfect legibility, even in strong sunlight and at night. The screen is also still easy to read at very steep angles.

FUNCTIONAL EVEN IN EXTREME SITUATIONS The display is still fully operational at -30°C. The larger spaces between the individual touch elements allow precise control even when wearing gloves.

PERFECTION AND DESIGN

The innovative and functional design of the TR10 is a masterpiece of engineering and has been specially constructed for the US market. The material of the cover is more robust to better withstand extreme challenges in the field. In just a few easy steps the nozzle ring cover can be removed and all essential parts of the machine are immediately accessible. Ease of maintenance is increased and transport safety is improved by the integration of the most fragile parts in the turbine housing.

INNOVATION MAKES THE DIFFERENCE

Consummate precision and technical innovation down to the very last detail. This is the new TR10 fan gun. This is TechnoAlpin.

TECHNOALPIN®

TR10

TECHNICAL DATA

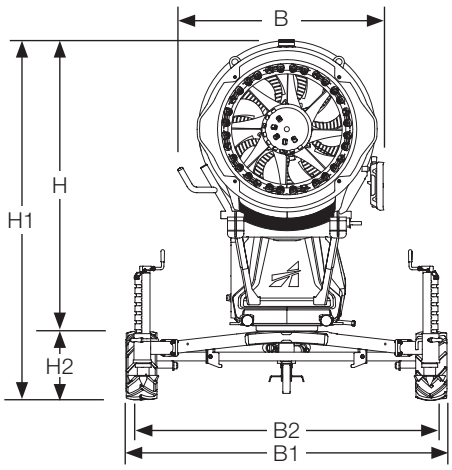

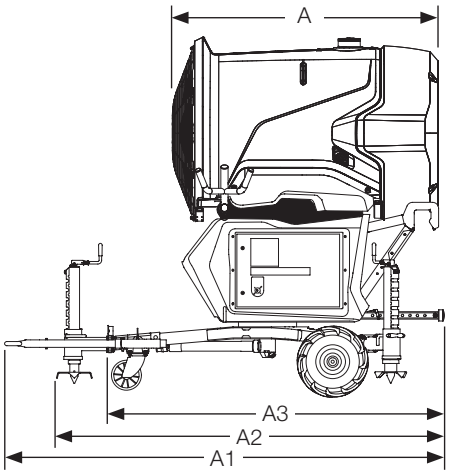

Electrical characteristics	
Rated voltage	480 V
Full load current	40 A*
Largest motor	36.2 A*
Nominal frequency	60 Hz
Connection plug	4x60 A
Heating	1.75 HP
Dimensional data	
Snow gun length A	5'9"
Snow gun width B	4'7"
Snow gun height H	6'7"
Undercarriage height H2	1'3"
Total height H1	8'2"
Length [max.] A1	10'2"
Length [without steering] A2	8'1"
Length [without front jacks] A3	6'11"
Track [wheels] B1	7'3"
Width [without wheels] B2	7'1"
Weights	
Snow gun - compressor	1,560 lb 14 oz

Transport frame with jacks	264 lb 9 oz
Double lifting bracket	83 lb 12 oz
Kit for mobile carriage tow (CTGR0007)	136 lb 11 oz
100' Cable - electrical power supply	66 lb 2 oz
100' Cable - control	17 lb 10 oz
TR10AM Total weight [max.]	2,129 lb 11 oz
Miscellaneous	
Operating temperature	-13 ÷ +36 °F
Rotational speed	1,800 rpm
Turbine inclination	45 deg.
Horizontal rotation	360 deg.
Swing (automatic)	180 deg.
Water	
Operating pressure	116 ÷ 580 psi
Water filter	250 micron
Water connection - Camlock	2"
Nozzle configuration	
Nucleators	8
Fixed Quadrijet nozzles	8
Controllable Quadrijet nozzles	16

Data are subject to change depending on the type of plant and/or the country of installation (please always refer to the wiring diagrams).

* Measurements at nominal voltage at 820 ft (250 m) above sea level and at a temperature of 32°F (0 °C).

09.2020 - Subject to technical modifications.
dv media

WWW.TECHNOALPIN.COM